FRU (Field Replaceable Unit) List

Part List

Picture	Partname	Description	Vendor Part No.
	Adapter	Adaptor(AC/DC),40W,12 V,3.33A,UP04081120-01W	2719040122
	FUNCTION BUTTON BOARD	PCBA ,Rigid,201-0M	35A15K0218
	INVERTER BOARD	DC/AC INVERTER,TWS-444-936, TYP.2400V/5MA	2714000001
	Main Board	PCBA ,Rigid,203-03	35A15S0223
	CABLES	FFC AD_OSD_GROUNDING, TennRich,121.5*9.5mm	3241500004
	AUDIO CABLE	28AWG,180 cm	32F2818001

	MONITOR CABLE	427C,30AWG,180cm	32F3018001
	STAND BASE	Seat Assy,	40A15929D3
	LCD FRONT BEZEL	Bezel Assy	40A1529947
	LCD BACK COVER	Rear Assy	40A15929C4
	Hinge Cover	Cover Hinge	40A15929D5
	MAINBOARD COVER	Cover_pcb_ad, D-Sub Only	41A1599115
	LCD BRACKET	METAL COVER PCB-X,	41A1599116

Explosion Diagram

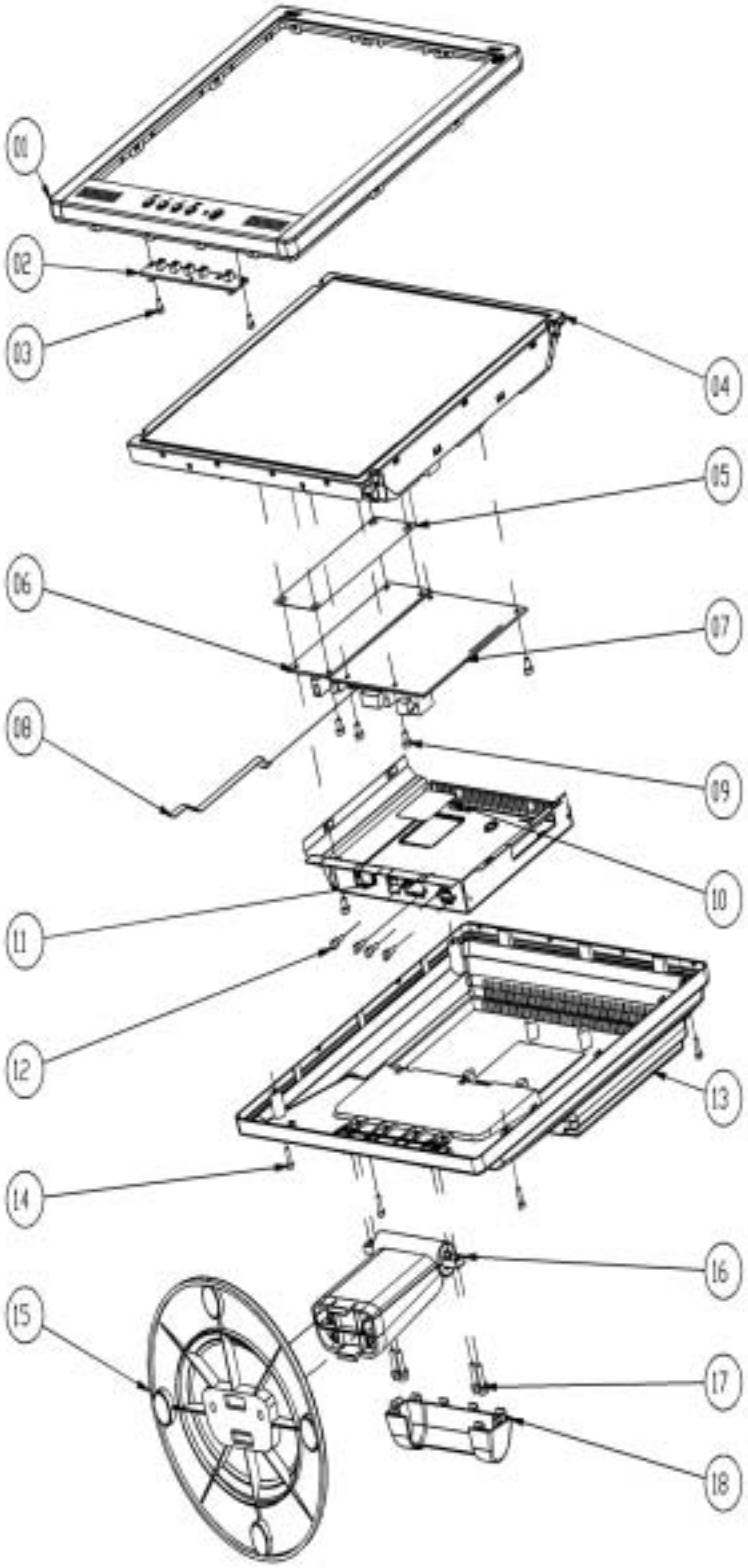

1.BEZEL_W/_SPEAKER_ASSY
2.OSD PCBA
3.SCREW
4.PANEL ASSY
5.PET_FILM_METAL_FRAM_R EAR
6.INVERTER
7.SMART PCBA
8.FFC AD_OSD
9.SCREW
10.PET ISOLUTION FILM
11.METAL COVER SMART
12.STAND-OFF
13.REAR_ASSY
14.SCREW
15.SEAT_ASSY
16.STAND_ASSY
17.SCREW
18.STAND HINGE_COVER

Schematic Diagram

Main Board

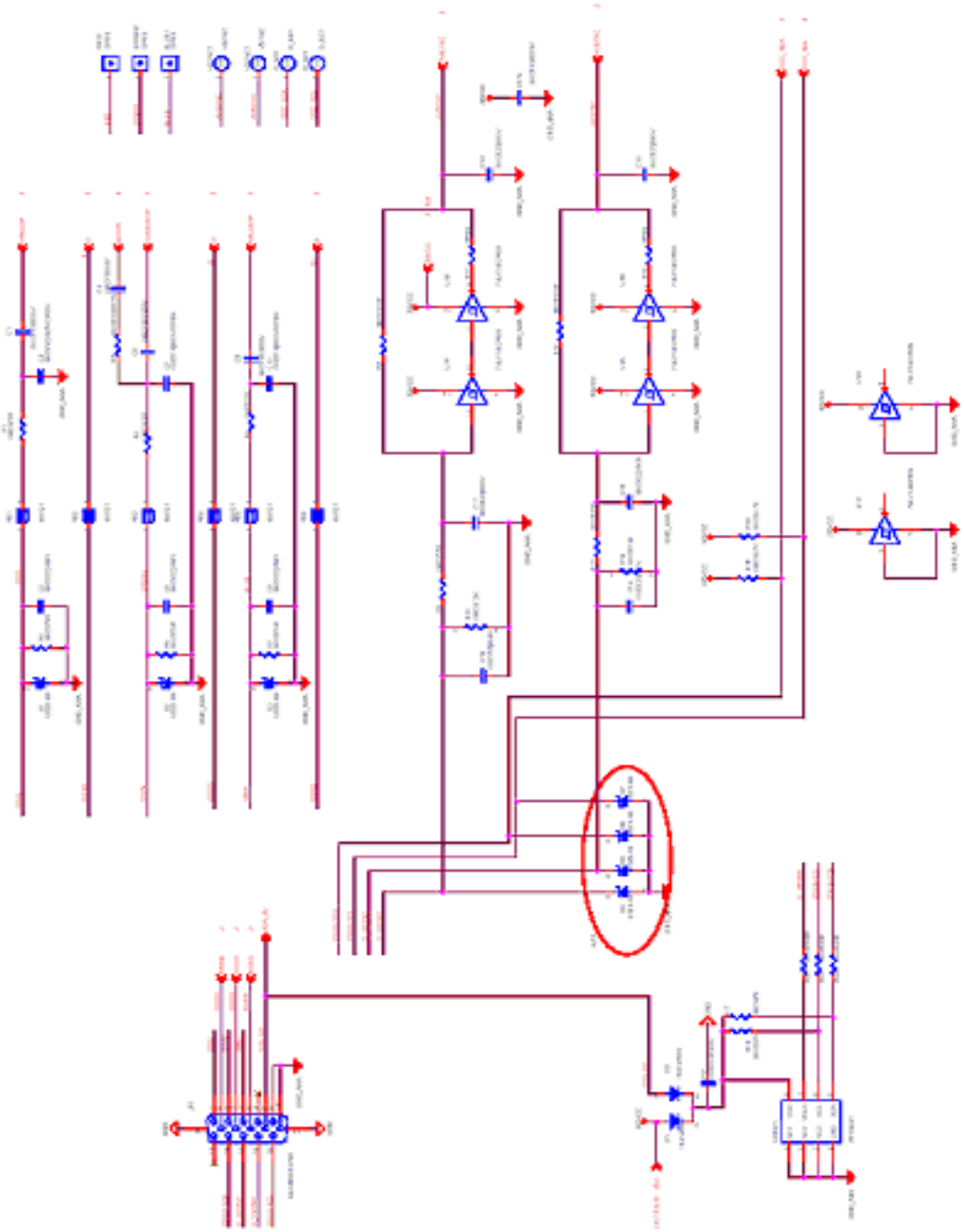

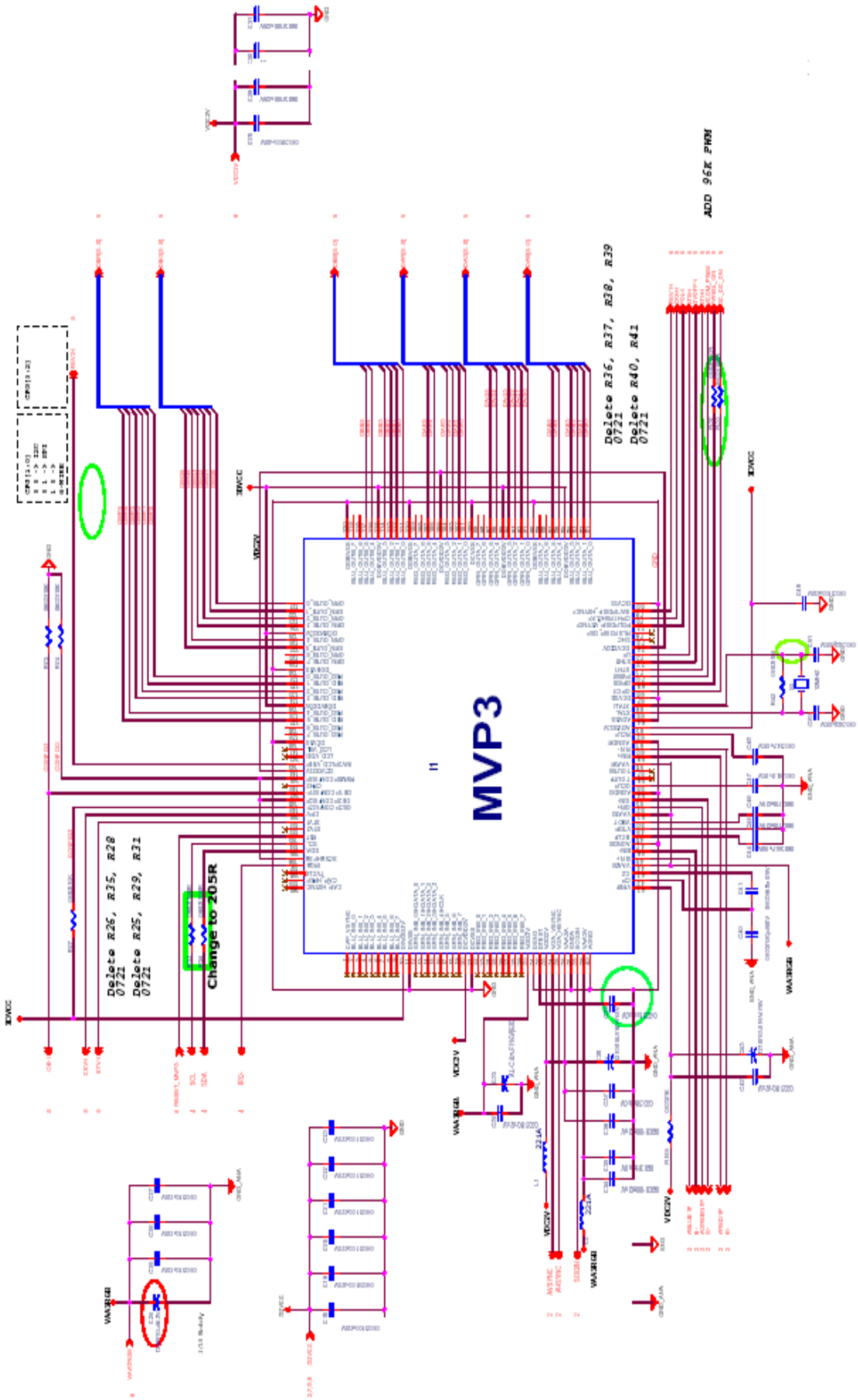
MVP3
Delete R26, R35, R28
0721
Delete R25, R29, R31
0721
Change to 205R
Delete R36, R37, R38, R39
0721
Delete R40, R41
0721
ADD 96K PWM

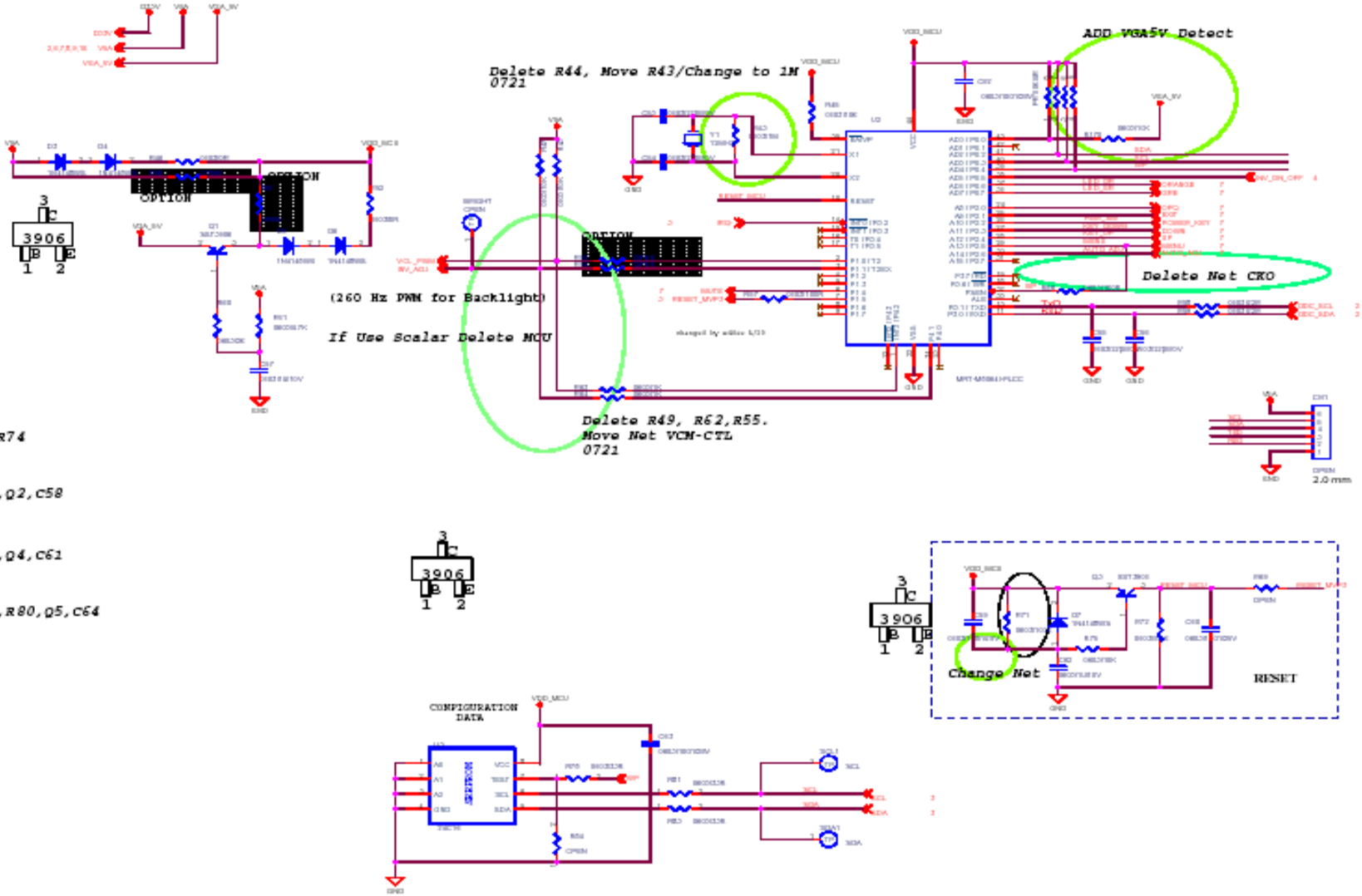

Delete R67,R74
0722

Delete
R65,R66,R68,Q2,C58

Delete
R70,R73,R76,Q4,C61

Delete
R77,R79,R82,R80,Q5,C64
Net VCM-CTL

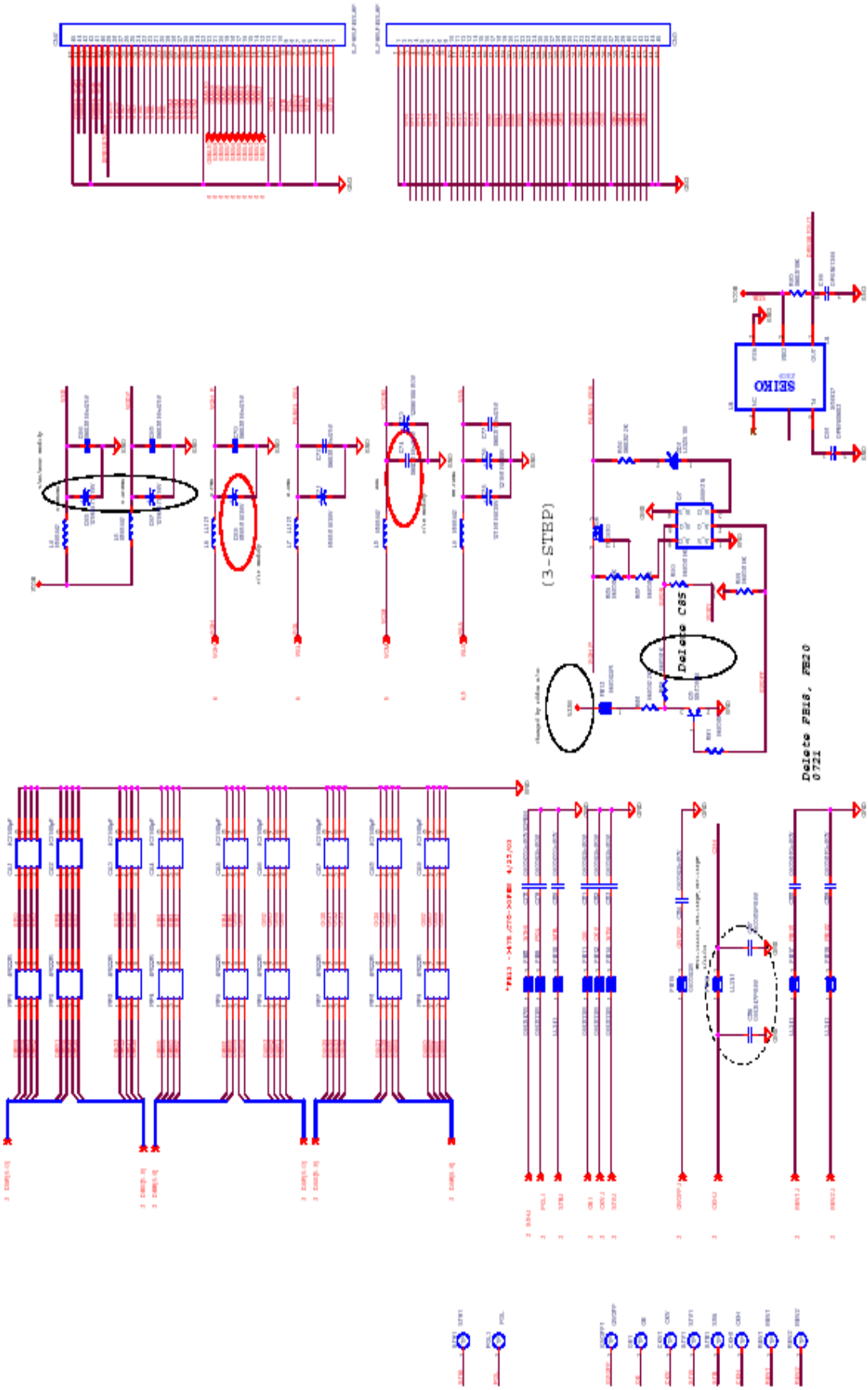
(3-STBP)
Delete C65
SEIKO
Delete FB18, FB20
0721

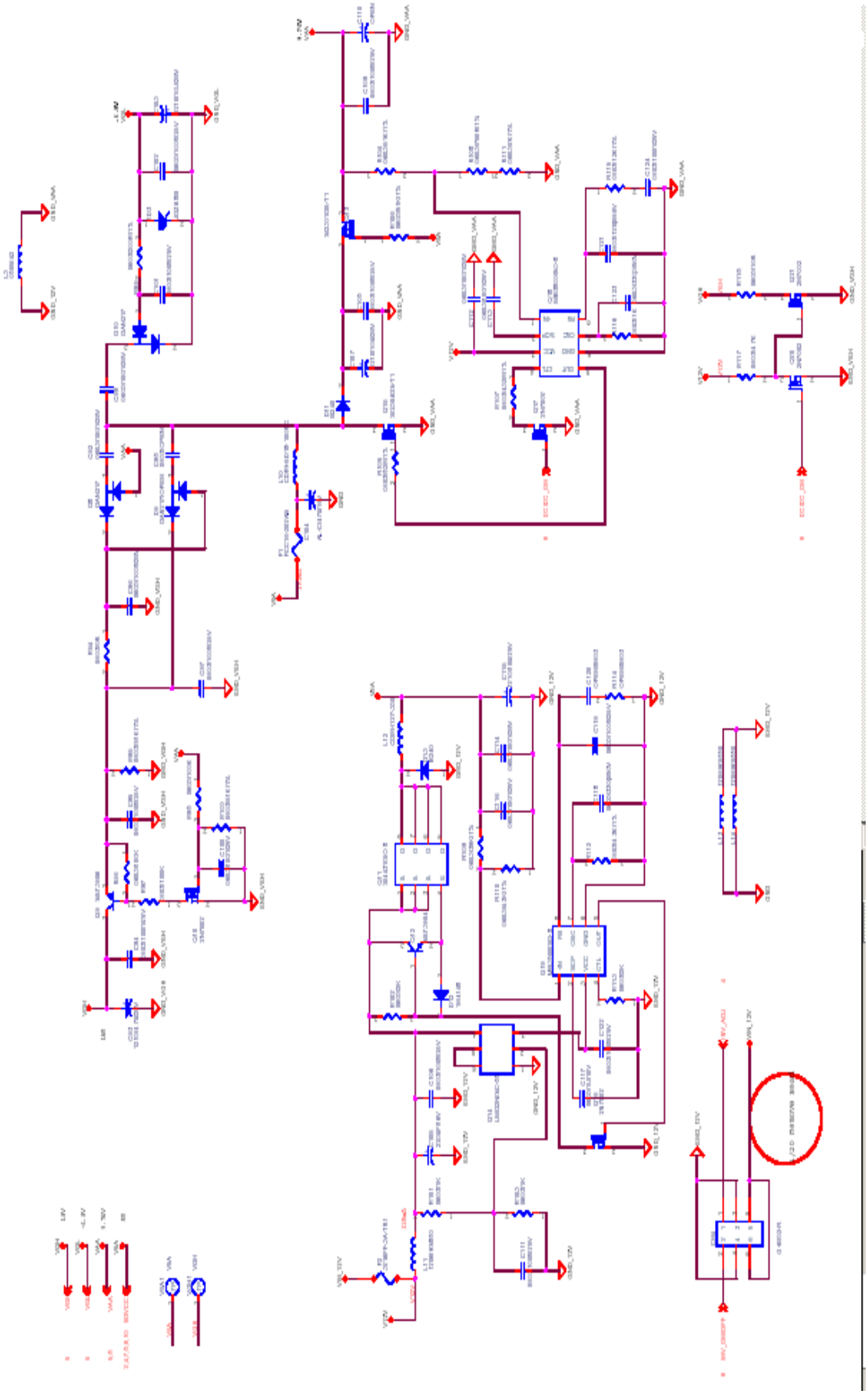

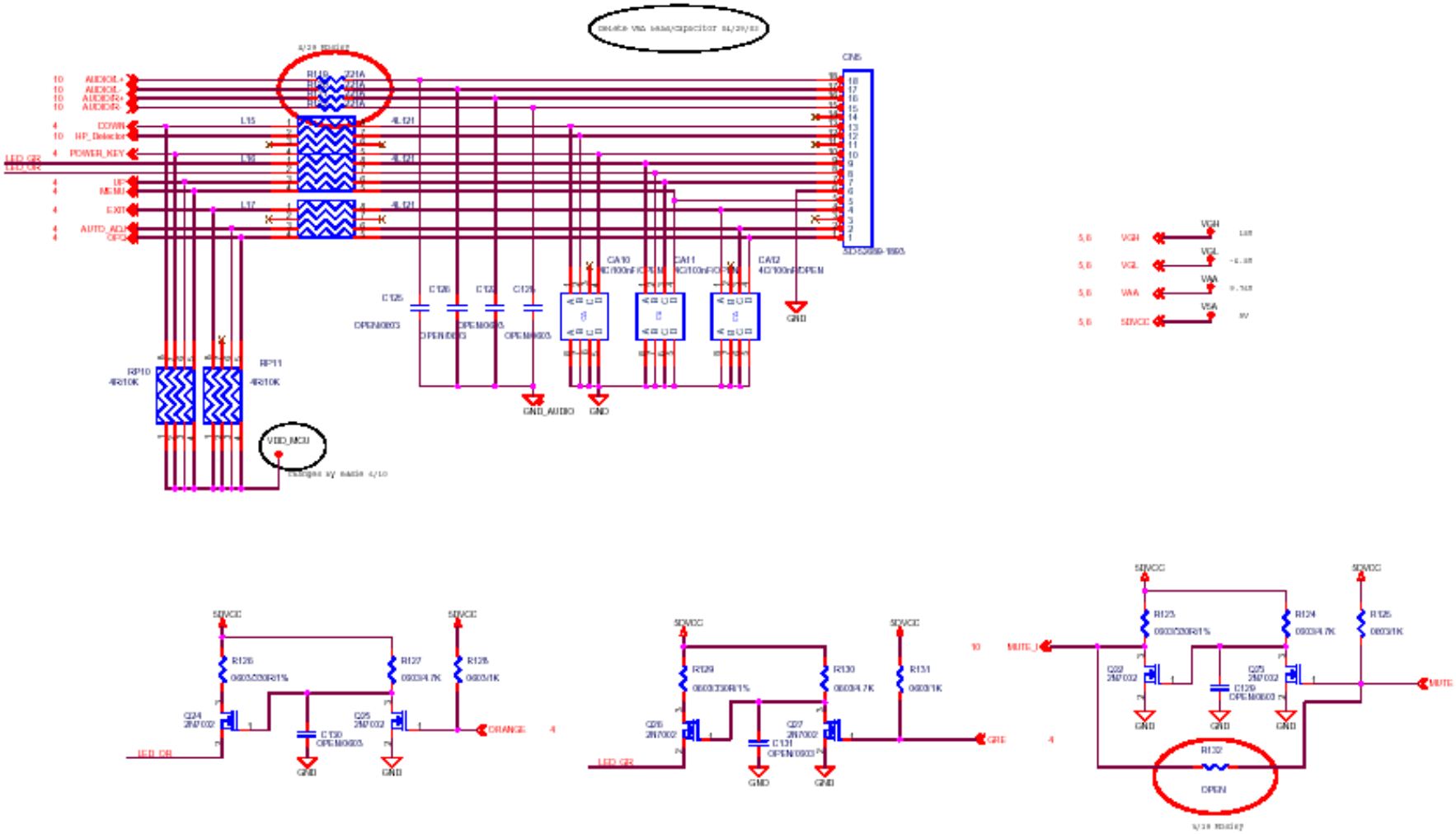
AUDIOL+
AUDIOL-
AUDIOR+
AUDIOR-
COVR
HP_Detector
POWER_KEY
LED_GR
LED_OR
UP
MENU
EXIT
AUTO_ADJ
OPC
CN5
RP10
4R210K
RP11
4R210K
VDD_MCU
GND_AUDIO
GND
VGN
VGL
VAA
VSA
SDVCC
R126
R127
R128
Q24
2N7002
Q25
2N7002
C130
OPEN0603
ORANGE
R129
R130
R131
Q26
2N7002
Q27
2N7002
C131
OPEN0603
GRE
R123
R124
R125
Q22
2N7002
Q23
2N7002
C129
OPEN0603
MUTE_I
MUTE
R132
OPEN

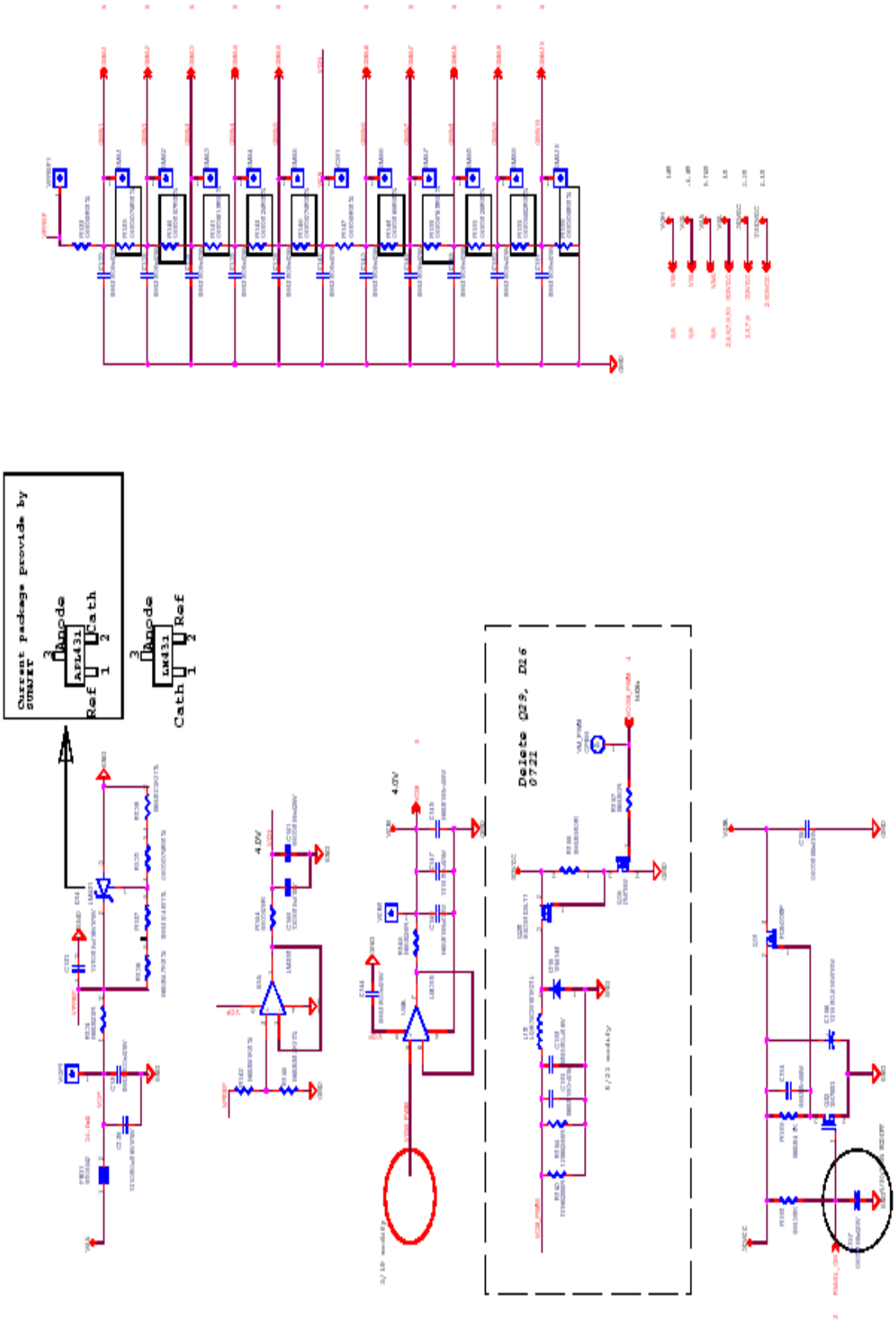
Current package provide by SUNJET
Anode
APL431
Ref
Cath
Anode
LM431
Cath
Ref
Delete Q29, D16
0721
4.0V
4.0V

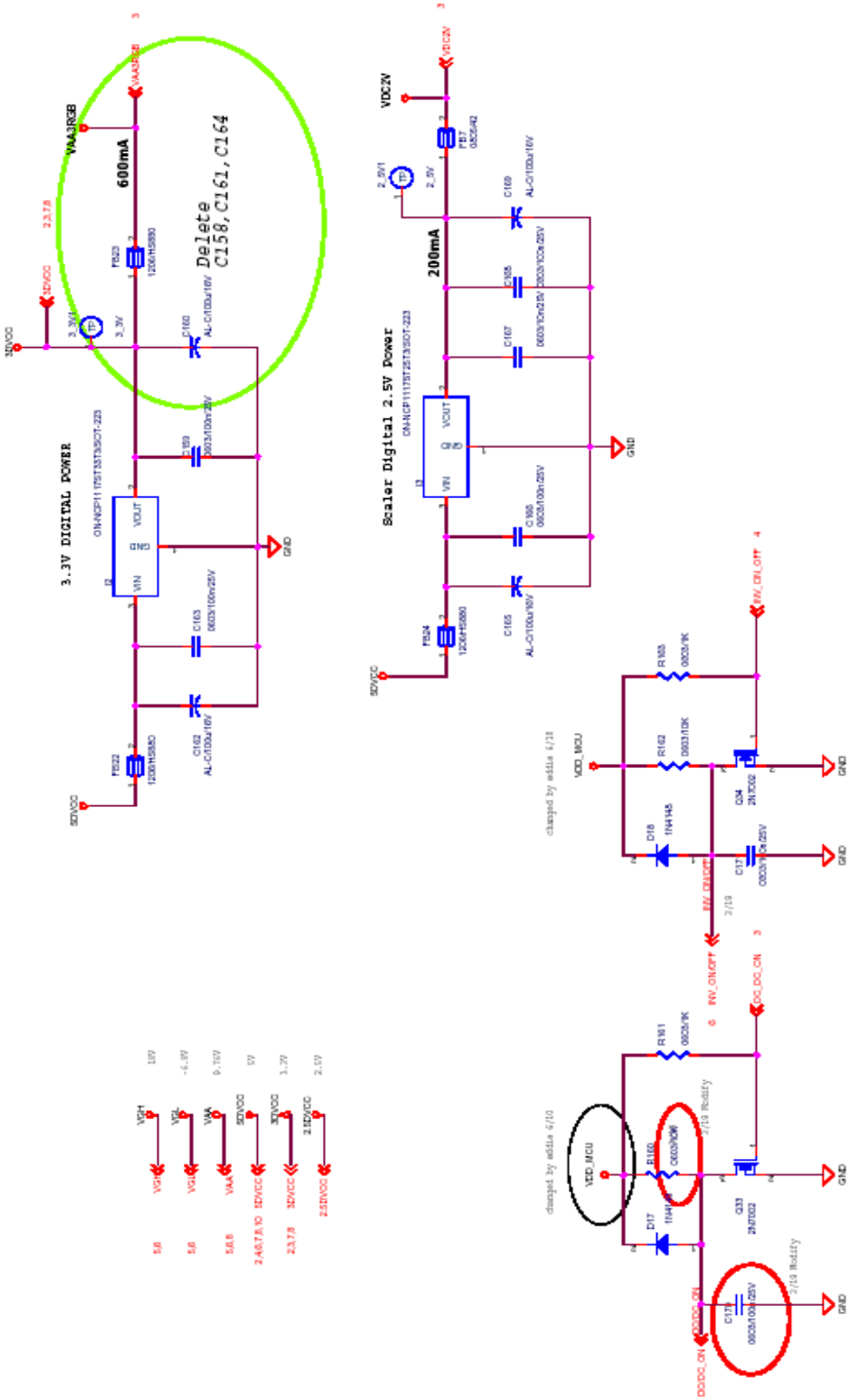
3.3V DIGITAL POWER
Scaler Digital 2.5V Power
600mA
200mA
Delete
C158,C161,C164
VAA3RGB
VDC2V
VDD_MCU
GND

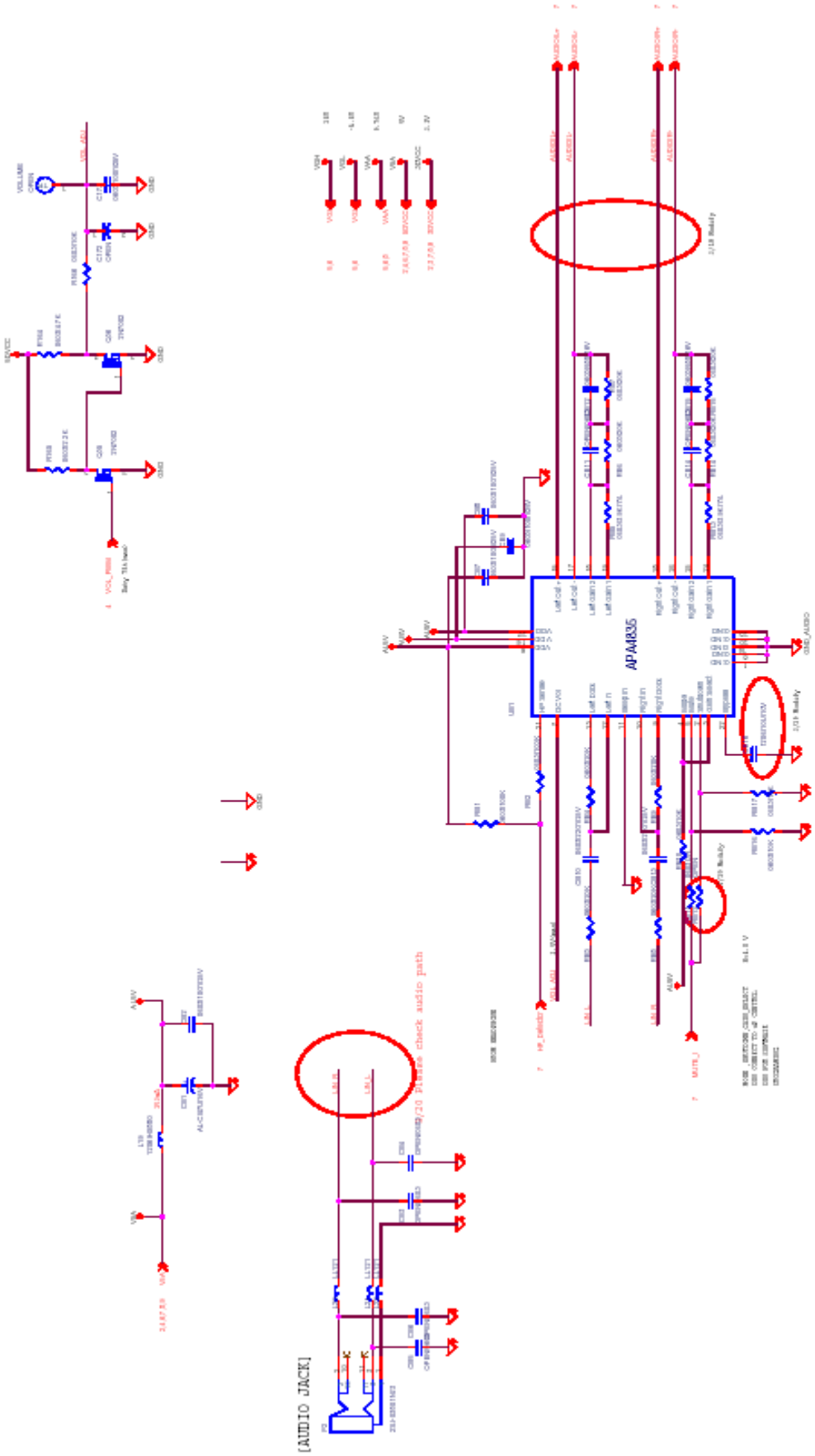
AP4835
[AUDIO JACK]